GIERSCH

Technical Information • Data Sheet

MG10-ZM-LN

Issued April 2024
Subject to tech. modifications
to improve the product!

Gas

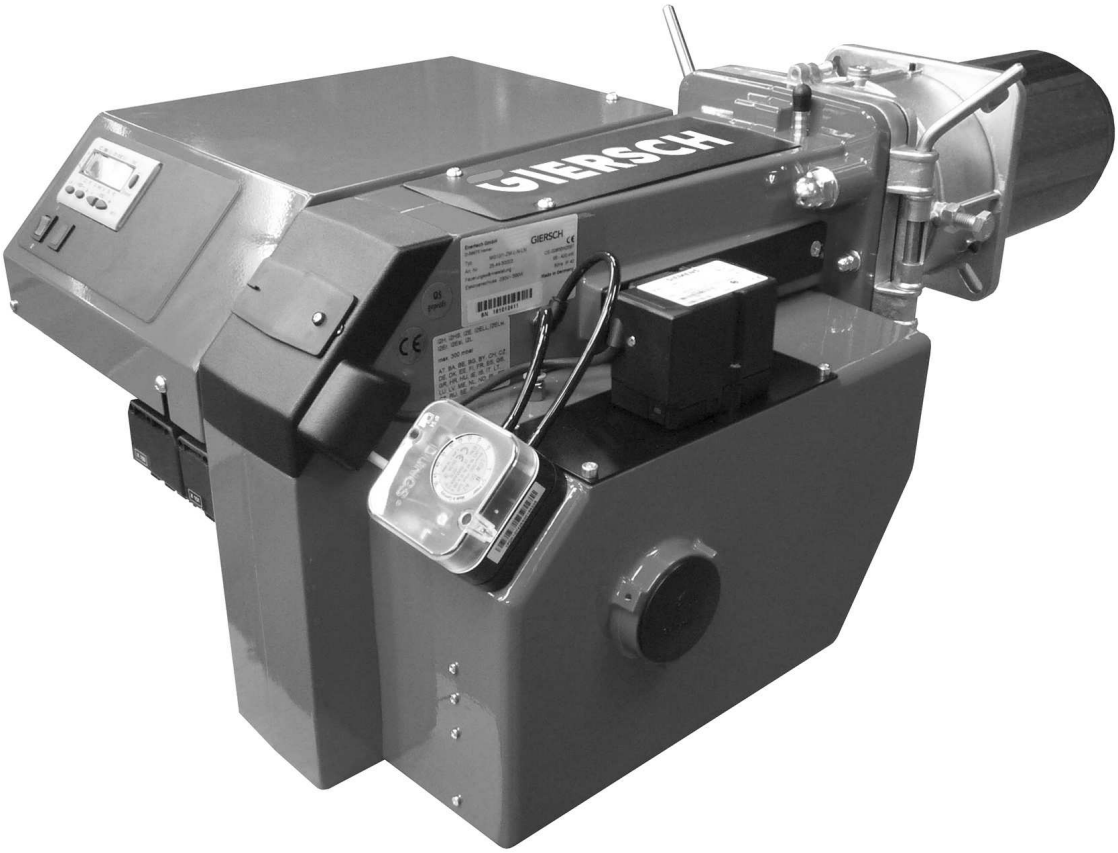

CE

GB

Electrical connection

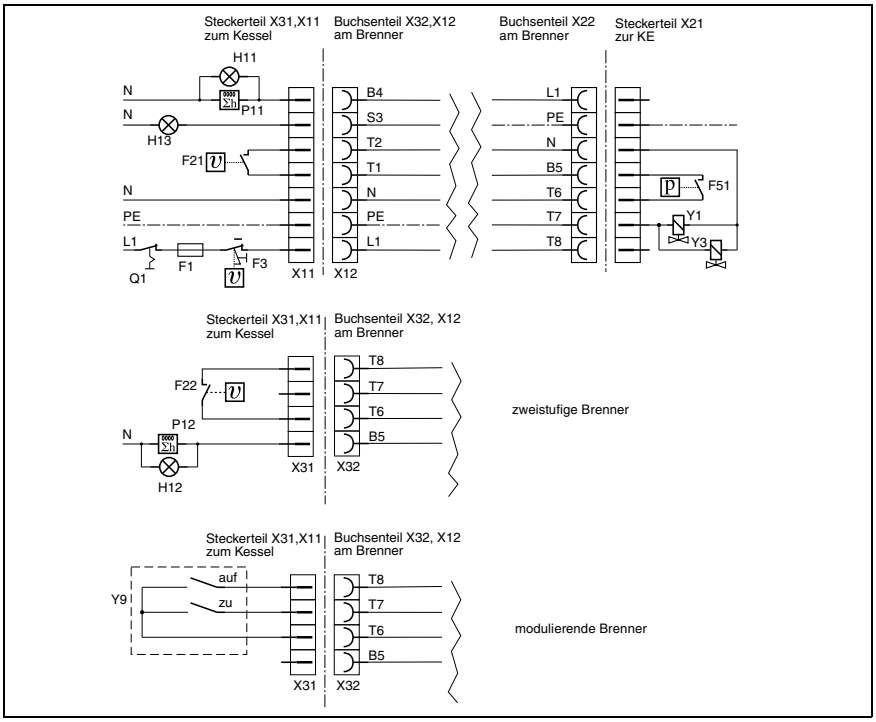

Legend:

F1	ext. Fuse
F21,F22	ext. Temp. controller 1st/2nd stage
F3	ext. Safety temperature limiter
F51	Gas pressure switch
Q1	Heating main switch
H11,H12	Ext. operating lamp
H13	Ext. lamp fault signal
L1	Phase
PE	Protective conductor
P11,P12	Operating hours counter
Y1,Y2	Solenoid valve
Y3	Safety solenoid valve
Y9	External controller

Selection diagrams

MG10/1-ZM-LN

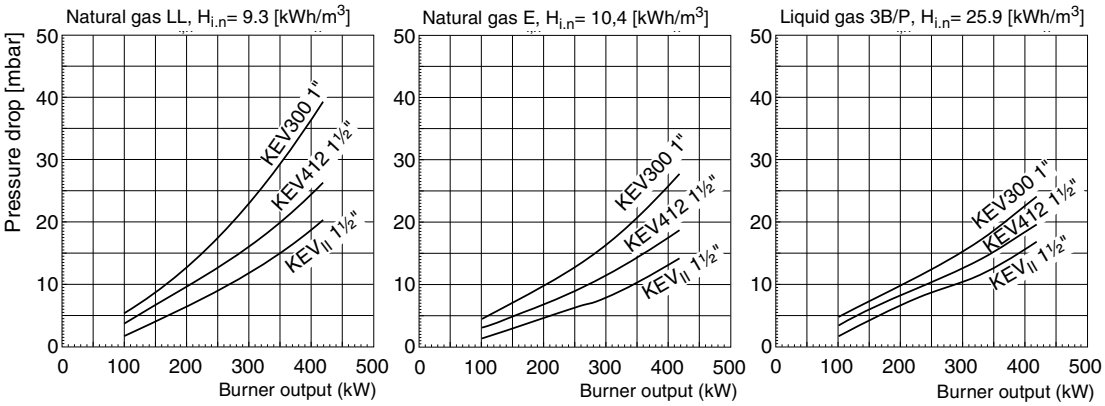

MG10/2-ZM-LN

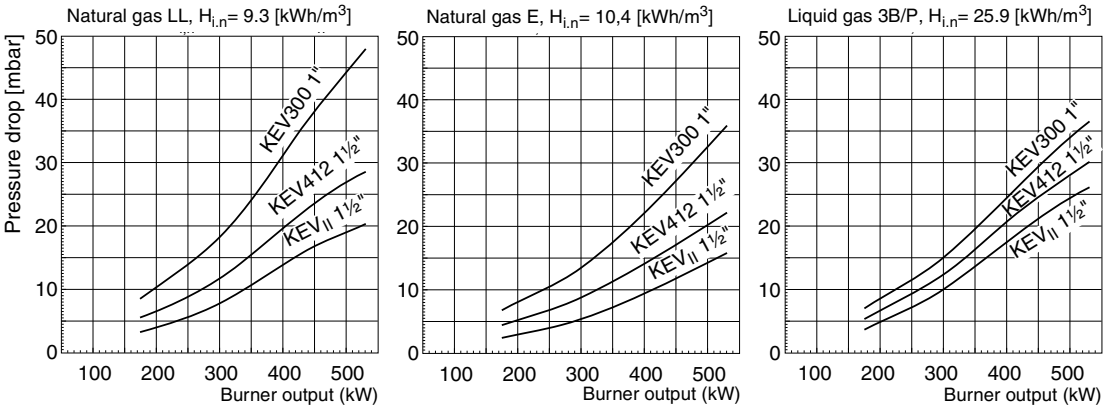

G. 24.04.24

Technical specifications

	Burner type	
Technical specifications	**MG10/1-LN**	**MG10/2-LN**
Burner output in kW	95 - 420	125 - 530
Gas type	Natural gas LL + E = „N“, liquid gas = „F“	
Mode of operation	two-stage or modulating	
Voltage	1 / N / PE ~ 50 Hz 230 V	
Max. power consumption at start / during operation	4,0 A max. / 2,3 A eff.	6,5 A max./ 3,5 A eff.
Electric motor power (at 2800 rpm) in W	370	750
Flame control	Ionisation	
Burner management system	LMV27	
Weight in kg	45	48
Noise emission in db(A)	≤ 78	
Gas burner class	5	3
NOx limit	≤ 56 mg/kWh	≤ 80 mg/kWh

MG10/1-ZM-L-LN						MG10/1-ZM-L-N								MG10/1-ZM-L-F			
						Natural gas LL Hi,n = 9,3 [kWh/m³]				Natural gas E $H_{i,n}$ = 10,4 [kWh/m³]				LPG $H_{i,n}$ = 25,89 [kWh/m³]			
Burner output [kW]		Boiler output η= 92% [kW]	Air flap position [°]		Burner heat pos. [mm]	Gas nozzle pressure [mbar]		Gas flow rate [m³/h]		Gas nozzle pressure [mbar]		Gas flow rate [m³/h]		Gas nozzle pressure [mbar]		Gas flow rate [m³/h]	
Stage 2	Stage 1	Stage 2	Stage 2 P 9	Stage 1 P 1		Stage 2	Stage 1	Stage 2	Stage 1	Stage 2	Stage 1	Stage 2	Stage 1	Stage 2	Stage 1	Stage 2	Stage 1
180	95	166	15	6	**15**	3,8	1,2	20,0	10,5	3,0	0,9	17,8	9,4	4,8	1,0	7,2	3,8
240	120	221	23	7	**15**	7,2	2,0	26,6	13,3	5,6	1,6	23,8	11,9	7,2	1,6	9,6	4,8
280	150	258	36	9	**15**	10,0	2,7	31,0	16,6	7,8	2,1	27,8	14,9	9,8	2,8	11,1	6,0
330	170	304	90	12	**15**	13,0	3,2	36,6	18,8	10,2	2,5	32,7	16,9	13,8	3,6	13,1	6,8
280	140	258	27	10	**0**	8,6	1,7	31,0	15,5	6,7	1,3	27,8	13,9	8,5	2,0	11,1	5,6
360	180	331	40	15	**0**	12,0	2,8	39,9	20,0	9,4	2,2	35,7	17,8	13,0	3,8	14,3	7,2
380	200	350	50	17	**0**	13,8	3,8	42,1	22,2	10,8	3,0	37,7	19,8	15,8	4,2	15,1	8,0
420	220	386	90	18	**0**	16,7	4,6	46,6	24,4	13,1	3,6	41,6	21,8	18,6	5,0	16,7	8,8

MG10/2-ZM-L-LN						MG10/2-ZM-L-N								MG10/2-ZM-L-F			
						Natural gas LL Hi,n = 9,3 [kWh/m³]				Natural gas E $H_{i,n}$ = 10,4 [kWh/m³]				LPG $H_{i,n}$ = 25,89 [kWh/m³]			
Burner output [kW]		Boiler output η= 92% [kW]	Air flap position [°]		Burner heat pos. [mm]	Gas nozzle pressure [mbar]		Gas flow rate [m³/h]		Gas nozzle pressure [mbar]		Gas flow rate [m³/h]		Gas nozzle pressure [mbar]		Gas flow rate [m³/h]	
Stage 2	Stage 1	Stage 2	Stage 2 P 9	Stage 1 P 1		Stage 2	Stage 1	Stage 2	Stage 1	Stage 2	Stage 1	Stage 2	Stage 1	Stage 2	Stage 1	Stage 2	Stage 1
250	125	230	16	7	**5**	3,5	1,4	25,5	13,0	2,7	1,1	22,8	11,6	6,3	1,5	10,0	5,0
300	150	276	26	9	**5**	5,9	2,0	33,3	16,6	4,6	1,6	29,7	14,9	9,1	2,2	11,9	6,0
400	200	368	53	13	**5**	10,2	2,8	44,3	22,2	8,0	2,2	39,7	19,8	16,2	4,0	15,9	8,0
440	220	405	90	16	**5**	12,8	3,2	48,8	24,4	10,0	2,5	43,6	21,8	19,8	4,9	17,5	8,8
360	180	331	33	14	**0**	7,7	3,1	39,9	20,0	6,0	2,4	35,7	17,8	11,3	2,8	14,3	7,2
440	220	405	52	20	**0**	12,0	4,2	48,8	24,4	9,4	3,3	43,6	21,8	16,8	4,2	17,5	8,8
500	250	460	70	23	**0**	14,4	5,0	55,4	27,7	11,3	3,9	49,6	24,8	22,0	5,5	19,9	10,0
530	270	488	90	24	**0**	15,5	5,2	58,8	29,9	12,1	4,1	52,5	26,8	24,5	6,3	21,1	10,8

Overall dimensions / Boiler connection measures

All dimensions in mm (Dimensions in brackets MG10/2-ZM-LN)

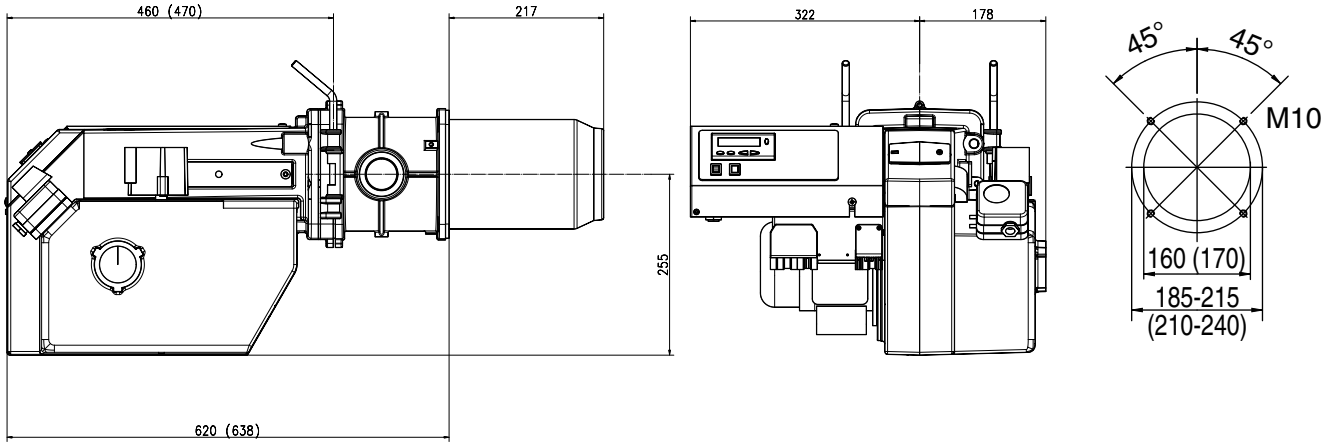

Working range

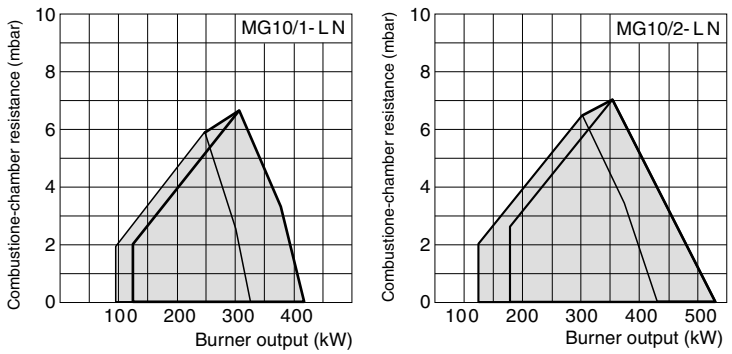

— Burner head "close"
— Burner head "open"

Working range acc. to DIN EN 676. The working range is referred to 15°C and 1013 mbar.

All information in this technical documentation as well as the drawings, photos and technical descriptions placed at your disposal remain our property and may not be duplicated without our written permission given in advance.
Subject to alterations.

Giersch GmbH • Brenner und Heizsysteme
Adjutantenkamp 18 • D-58675 Hemer • Telefon 02372/965-0 • Telefax 02372/61240
E-Mail: info@giersch.de • Internet: http://www.giersch.de

04-2024 • Art.Nr.71-25-57622-GB • Printed in Germany •Giersch GmbH